INSTALLATION AND MAINTENANCE MANAUAL

Techtrol Loop Powered Indicator- 'LP-Cator'

Techtrol
Innovating Level Controls Since 1984

LP-Cator is used with any transmitter, measuring any parameter like level, temperature, pressure & flow. It is directly powered through 4-20 mA loop and provide precise indication.

Pre Installation Check

- Ensure display unit & its model number is as per PO
- Ensure that instrument is not physically damaged in transit
- Make connections to LP-Cator as shown in 'Terminations & Wiring'
- Switch On the supply and observe display value
- At 4 mA input, it indicate lowest value
- Increase input 4-20mA gradually, observe display value gradually increasing to its maximum
- It is calibrated in factory for 4-20mA input and for the given unit as specified in PO.

With IP65 Enclosure

With Ex-proof Enclosure

Installation

- Mount LP- Cator on identified location and secure it on four mounting holes.
- Please ensure -mounting surface should be flat and without vibration.
- Mounting location should be away from high voltage cables & contactor.
- The temperature of indicator location should be below rated temp (60°C)
- Where installed outdoor, it should be protected from direct sunlight using canopy

Mounting Dimensions

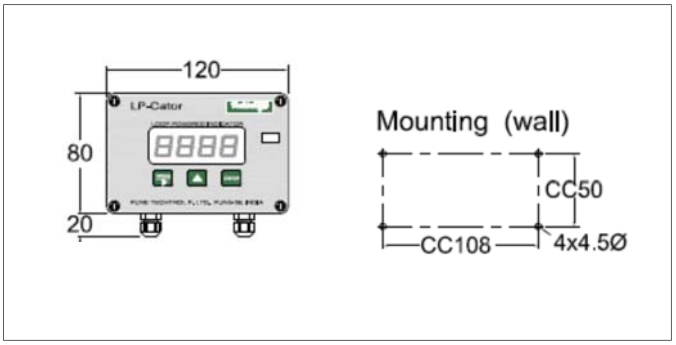

WP Enclosure

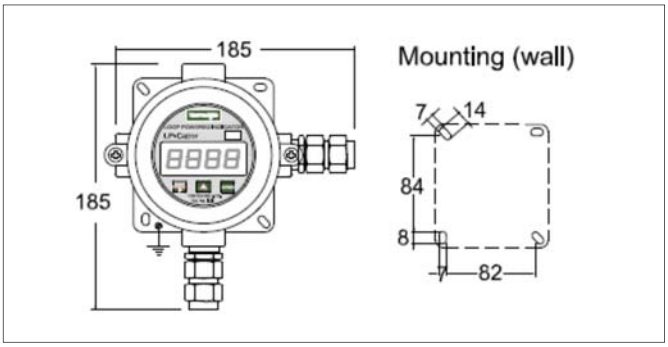

Ex-proof Enclosure

Termination & Wiring

- While wiring the indicator, power supply should be OFF.
- Connect 24 VDC loop supply from PLC/ DCS /Process indicator and transmitter to LP-Cator as shown in figure with correct polarity.

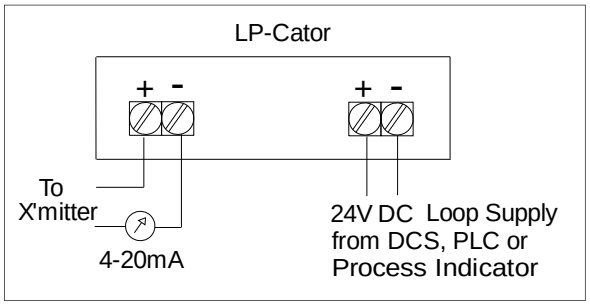

Precautions

- Wiring should run away from power cable, contactors or motors.
- Ensure enclosure is closed properly along with its gasket in place and there is no gap between cable OD and cable gland ID to maintain (IP65) weather proofness.
- Cable/wires from the enclosures should be routed downward to avoid seepage of water inside the enclosure
- Before switching supply, ensure wiring is correct and completed.
- In 'hazardous locations' do not open the enclosure cover before disconnecting switch from supply and carry out maintenance then after to prevent ignition/ explosion.

Periodic Maintenance

- During maintenance, switch off the supply.
- Check and tighten loose electric connections
- After maintenance, close the enclosure properly with its cover and gasket for weather proofness.
- Clean internally to ensure, it is free from metallic particles and dust

Programming

Key Functions

MODE/DEC Key - To enter in the program menu to configure data or decrement digit value when in sub menu. Also to enter in next menu

UP/ SHIFT Key - To enter in submenu to increment the digit value. Also to shift decimal point.

ENT Key - To enter or save parameter

Run Mode - Data viewed on display is operating value
Programming Mode – Operator can use keypad in conjunction with display to set parameters

Programming Flow Chart

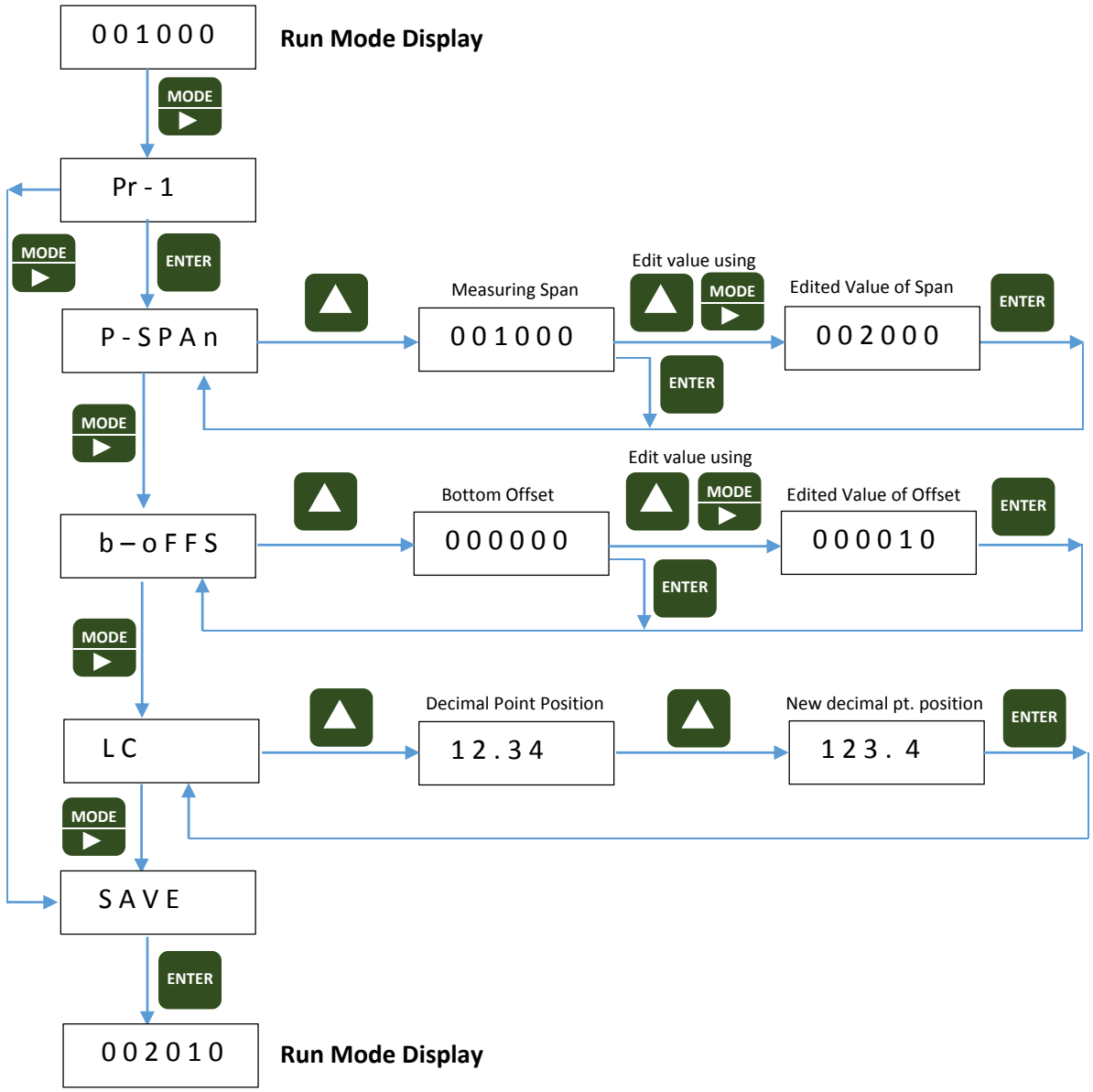

Trouble Shooting

Problem	Cause	Solution
No Display	a) Incorrect wiring and termination b) Loose connections c) Improper supply	a) Check & correct wiring. Refer Termination & Wiring b) Tighten loose connections c) Check & ensure correct supply (24VDC)
Display value not proper	a) Level range and bottom offset value not proper b) Calibration not proper	a) Check & re-program. b) Contact factory